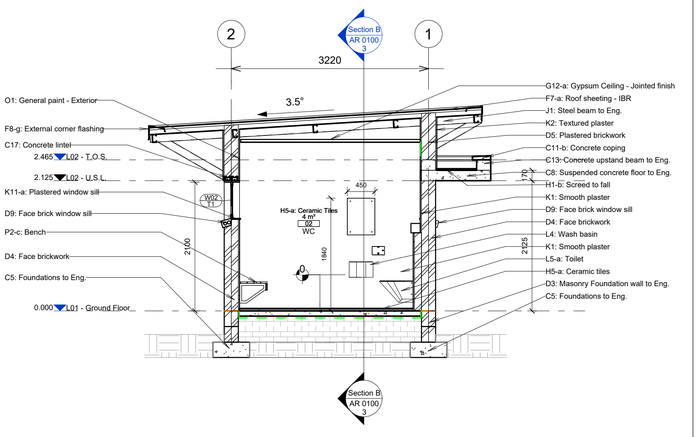


## 2 Section A
Scale 1 : 50

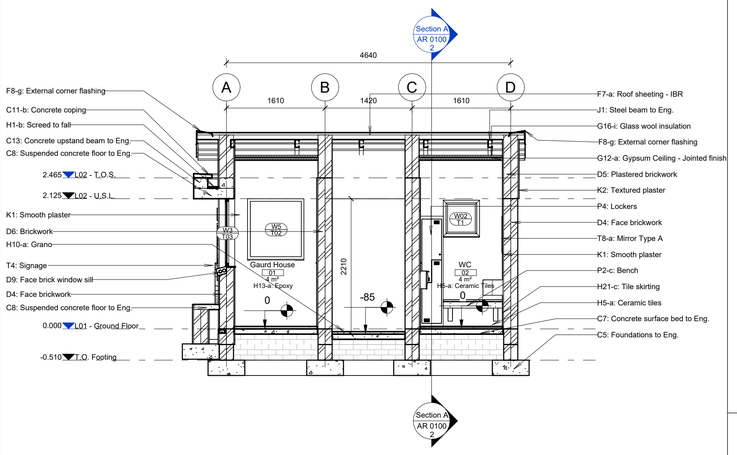


## 3 Section B
Scale 1 : 50

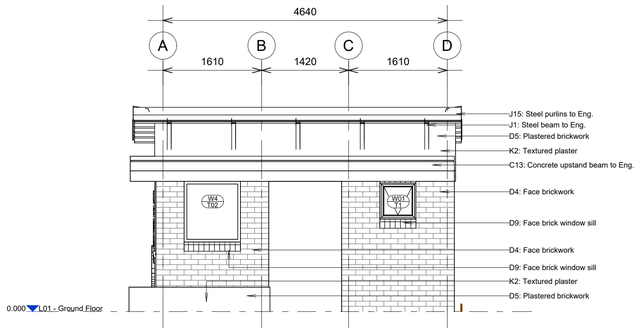


## 4 South Elevation
Scale 1 : 50

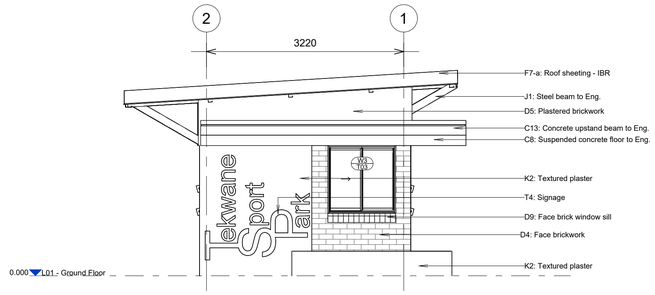


## 5 West Elevation
Scale 1 : 50

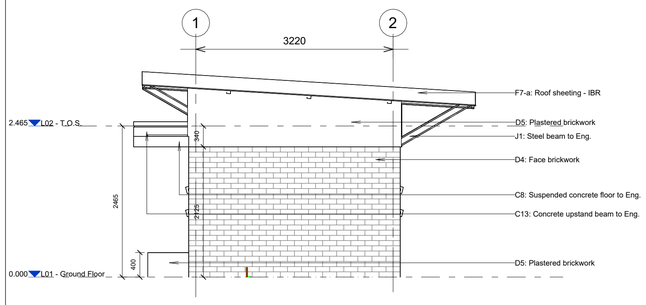


## 6 East Elevation
Scale 1 : 50

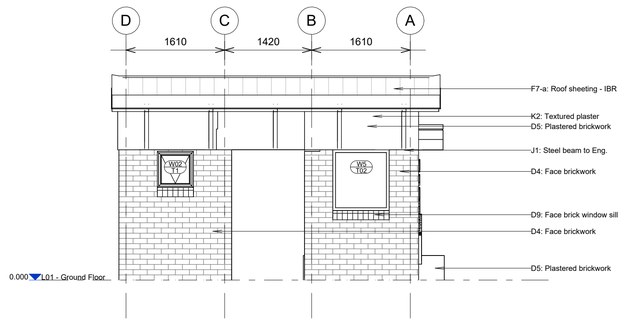


## 7 North Elevation
Scale 1 : 50

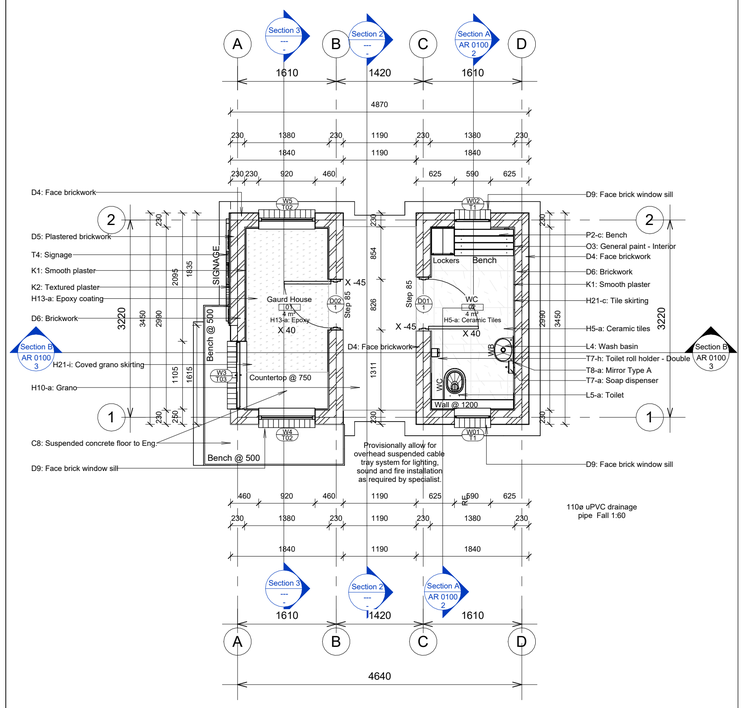


## 1 L01 - Ground Floor Plan
Scale 1 : 50

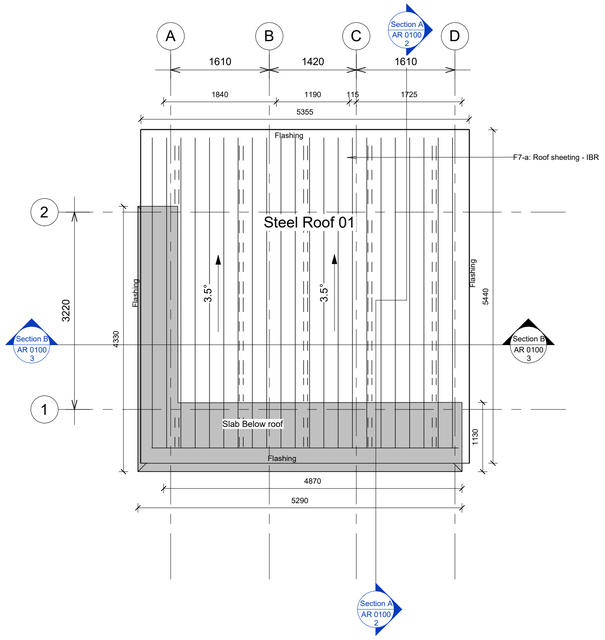


## 8 L02 - Roof Plan
Scale 1 : 50

**GENERAL SPECIFICATIONS**

**GENERAL**

1. In terms of the National Building Regulations and Standards Act (Act 103 of 1977) the construction of the works on these drawings can only commence once approval in writing from the Local Authority is obtained.
2. All materials used in the construction of the works indicated on these drawings shall either be SABS approved or have an Agrément South Africa Certificate unless otherwise stated.
3. No deviations from the approved building plans shall be allowed unless approved by the Local Authority prior to construction.
4. The Contractor shall adhere to all National Acts, Regulations, Standards, Ordinances and Bye Laws during construction.

**CONSTRUCTION**

The building / buildings on these drawings where designed by following the Deemed-to-Satisfy requirements of SANS10400 (3rd edition) or by Rational Design demonstrating better or equal than the SANS10400 requirements.

No deviation from the specifications will be allowed – it is an offence in terms of the National Building Regulations and Standards Act (Act 103 of 1977) to deviate from any approved building plan.

All demolition work shall be carried out as per Regulation E of the National Building Regulations and the Construction Regulations as issued in terms of The Occupational Health and Safety Act.

All construction work shall be executed by the contractor in terms of the following requirements as per SANS10400 – Application of the National Building Regulations, unless otherwise stated:

| | |
|---|---|
| General Requirements: | Part A |
| Structural: | Part B |
| Dimensions: | Part C |
| Public Safety: | Part D |
| Site Operations: | Part F |
| Excavations: | Part G |
| Foundations: | Part H |
| Floors: | Part J |
| Walls: | Part K |
| Roofs: | Part L |
| Stairways: | Part M |
| Glazing: | Part N |
| Lighting and Ventilation: | Part O |
| Drainage: | Part P |
| Non-water-borne sanitary disposal: | Part Q |
| Stormwater Disposal: | Part R |
| Accessible Buildings: | Part S |
| Fire Protection: | Part T |
| Space Heating: | Part V |
| Fire Installation: | Part W |
| Energy Usage: | Part XA |

Additional requirements as describe in the parts of SANS2001– Construction Works shall be adhered to:

| | |
|---|---|
| Earthworks (General) | Part BE1 |
| Site Clearance | Part BS1 |
| Concrete Works (Structural) | Part CC1 |
| Concrete Works (Minor Works) | Part CC2 |
| Installation of Glazing in frames | Part CG1 |
| Masonry Walling | Part CM1 |
| Strip footings for masonry walling | Part CM2 |
| Structural Steelwork | Part CS1 |
| Structural Timberwork (Flooring) | Part CT1 |
| Structural Timberwork (Roofing) | Part CT2 |
| Earthworks for buried pipelines | Part DP1 |
| Medium Pressure Pipelines | Part DP2 |
| Cable ducts | Part DP3 |
| Sewers | Part DP4 |
| Stormwater Drainage | Part DP5 |
| Below-ground Water Installations | Part DP6 |
| Cement Plaster | Part EM1 |

All geyser installations shall comply with Regulation XA2 of the National Building Regulations.

- Solar shall comply with SANS1307, SANS10106, SANS10254
- Heat Pumps shall comply with ISO5149 and SANS1352

All water reticulation system installations shall comply with SANS10252-1

All electrical low voltage installations and wiring shall comply with SANS10142-1

**COPYRIGHT NOTICE**

Copyright © ***ORBIC ARCHITECTS.*** Copyright subsists in this drawing. The person or entity whose name appears in the title block of this drawing, is hereby granted a non-exclusive license to use, display, print and / or reproduce this drawing to the extend necessary to carry out and complete the project described in the title block of this drawing.

This license in respect of the copyright is expressly limited as aforesaid and the person and/or entity referred to above shall not be entitled to grant sub-licenses in respect of the copyright in this drawing to any other entity.

This license confers no ownership rights in the copyright vesting in the drawing and this drawing and the copyright subsisting therein will, at all times, remain the property of ***ORBIC ARCHITECTS.***

Any unauthorized reproduction, publication, transmission, adaptation and/or inclusion of this drawing in a cinematograph film or television broadcast is an act of copyright infringement which will render the doer of the act liable for civil law copyright infringement and may in certain circumstances render the doer liable to criminal prosecution.

Requests and enquiries concerning this drawing and the rights subsisting there in should be addressed to the copyright owner.

**ACTS OF PARLIAMENT**

All Contractors shall ensure that, before any work is put in hand, they comply with all the necessary Acts of Parliament of the Republic of South Africa.

Revision Schedule

| No.: | Date: | Description: | Initials: |
|---|---|---|---|
| 0 | 2023/09/15 | Drawings Issued for Tender | FB |

J. TERBLANCHE
SACAP member no. 4787

ORBIC architects
NELSPRUIT - Tel: 013 757 0029 - E-mail: admin@orbic.co.za
Unit 7 Riverside Circle - 9 Waterlily Turn - Riverside Park Ext. 12 - Nelspruit - 1201
Copyright reserved on content, typography & style.

SKY HIGH consulting engineers

PROJECT TITLE
THEKWANE SPORT FIELD - GATE HOUSE

DRAWING TITLE
FLOOR PLAN

| Sheet Issue Date | Drawn by | Scale @A1 | Current Rev. Date |
|---|---|---|---|
| 2023/09/15 | FB | 1 : 50 | 2023/09/15 |

| Project No. | Status | Drawing No. | Current Rev. No. |
|---|---|---|---|
| N23-23 | T | AR 0100 | 0 |

FOR TENDER

2023/09/15 08:46:17 O:\2023\N23-23 THEKWANE SPORTS FIELD\DWG\ARCH\ TENDER\ - TT Revit\N23 - GATE HOUSE\N23-23_T_THEKWANE SPORTS FIELD GATE HOUSE.rvt